# Parsing

Jaruloj Chongstitvatana
Department of Mathematics and Computer Science
Chulalongkorn University

# Outline

- Top-down parsing
  - Recursive-descent parsing
  - LL(1) parsing
    - LL(1) parsing algorithm
    - First and follow sets
    - Constructing LL(1) parsing table
    - Error recovery
- Bottom-up parsing
  - Shift-reduce parsers
  - LR(0) parsing
    - LR(0) items
    - Finite automata of items
    - LR(0) parsing algorithm
    - LR(0) grammar
  - SLR(1) parsing
    - SLR(1) parsing algorithm
    - SLR(1) grammar
    - Parsing conflict

# Introduction

- Parsing is a process that constructs a syntactic structure (i.e. parse tree) from the stream of tokens.
- We already learn how to describe the syntactic structure of a language using (context-free) grammar.
- So, a parser only need to do this?

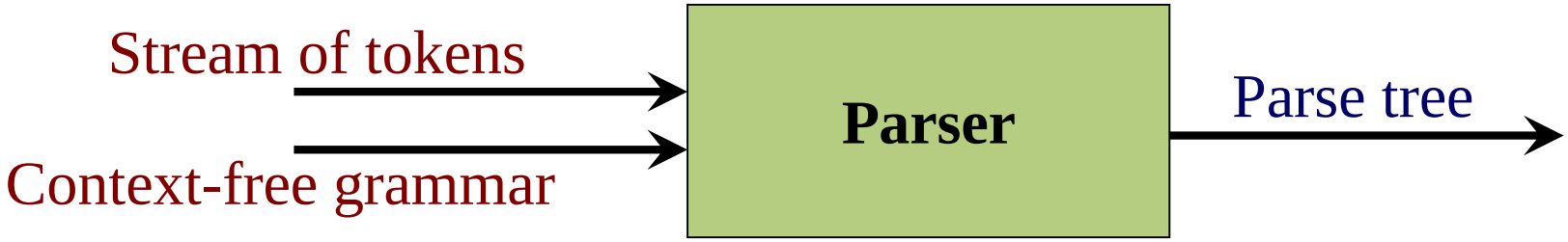

# Top–Down Parsing

- A parse tree is created from root to leaves
- The traversal of parse trees is a preorder traversal
- Tracing leftmost derivation
- Two types:
  - Backtracking parser
  - Predictive parser

Guess the structure of the parse tree from the next input

# Bottom–Up Parsing

- A parse tree is created from leaves to root
- The traversal of parse trees is a reversal of postorder traversal
- Tracing rightmost derivation

Try different structures and backtrack if it does not matched the input

# Parse Trees and Derivations

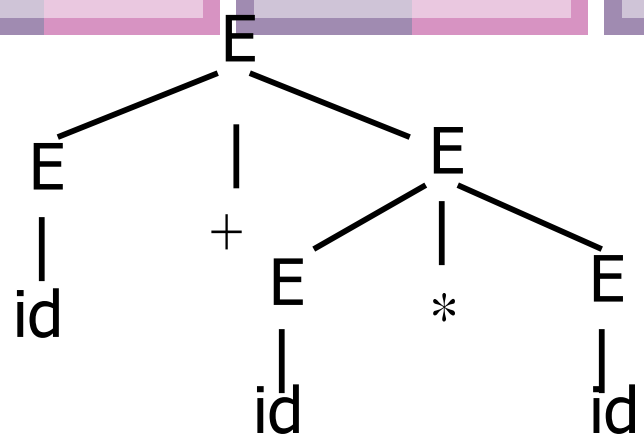


Top-down parsing

$$
\begin{aligned}
E &\Rightarrow E + E \\
&\Rightarrow id + E \\
&\Rightarrow id + E * E \\
&\Rightarrow id + id * E \\
&\Rightarrow id + id * id
\end{aligned}
$$

# Top-down Parsing

- What does a parser need to decide?
  - Which production rule is to be used at each point of time ?
- How to guess?
- What is the guess based on?
  - What is the next token?
    - Reserved word if, open parentheses, etc.
  - What is the structure to be built?
    - If statement, expression, etc.

# Top-down Parsing

- Why is it difficult?
  - Cannot decide until later
    - Next token: **if** Structure to be built: St
    - St $\rightarrow$ MatchedSt | UnmatchedSt
    - UnmatchedSt $\rightarrow$

      **if** (E) St| **if** (E) MatchedSt **else** UnmatchedSt
    - MatchedSt $\rightarrow$ **if** (E) MatchedSt **else** MatchedSt |...
  - Production with empty string
    - Next token: **id** Structure to be built: par
    - par $\rightarrow$ parList | $\lambda$
    - parList $\rightarrow$ exp , parList | exp

# Recursive-Descent

- Write one procedure for each set of productions with the same nonterminal in the LHS
- Each procedure recognizes a structure described by a nonterminal.
- A procedure calls other procedures if it need to recognize other structures.
- A procedure calls *match* procedure if it need to recognize a terminal.

# Recursive-Descent: Example

$E \rightarrow E\ O\ F \mid F$
$O \rightarrow + \mid -$
$F \rightarrow (\ E\ ) \mid id$

```
procedure F
{   switch token
    {     case (:  match('('); E; match(')');
          case id: match(id);
          default:  error;
    }
}
```

E ::= F {O F}
O ::= + | -
F ::= ( E ) | id

```
procedure E
{         E; O; F; }
```

- For this grammar:
  - We cannot decide which rule to use for E, and
  - If we choose $E \rightarrow E\ O\ F$, it leads to infinitely recursive loops.
- Rewrite the grammar into EBNF

```
procedure E
{   F;
    while (token=+ or token=-)
    {     O; F;   }
}
```

# Match procedure

```
procedure match(expTok)
{   if (token==expTok)
    then    getToken
    else    error
}
```

- The token is not consumed until **`getToken`** is executed.

# Problems in Recursive-Descent

- Difficult to convert grammars into EBNF
- Cannot decide which production to use at each point
- Cannot decide when to use $\lambda$-production $A \rightarrow \lambda$

# LL(1) Parsing

- LL(1)
  - Read input from (**L**) left to right
  - Simulate (**L**) leftmost derivation
  - **1** lookahead symbol
- Use stack to simulate leftmost derivation
  - Part of sentential form produced in the leftmost derivation is stored in the stack.
  - Top of stack is the leftmost nonterminal symbol in the fragment of sentential form.

# Concept of LL(1) Parsing

- Simulate leftmost derivation of the input.
- Keep part of sentential form in the stack.
- If the symbol on the top of stack is a terminal, try to match it with the next input token and pop it out of stack.
- If the symbol on the top of stack is a nonterminal X, replace it with Y if we have a production rule $X \rightarrow Y$.
  - Which production will be chosen, if there are both $X \rightarrow Y$ and $X \rightarrow Z$ ?

# Example of LL(1) Parsing

$E \Rightarrow TX$
$\Rightarrow FNX$
$\Rightarrow (E)NX$
$\Rightarrow (TX)NX$
$\Rightarrow (FNX)NX$
$\Rightarrow (nNX)NX$
$\Rightarrow (nX)NX$
$\Rightarrow (nATX)NX$
$\Rightarrow (n+TX)NX$
$\Rightarrow (n+FNX)NX$
$\Rightarrow (n+(E)NX)NX$
$\Rightarrow (n+(TX)NX)NX$
$\Rightarrow (n+(FNX)NX)NX$
$\Rightarrow (n+(nNX)NX)NX$
$\Rightarrow (n+(nX)NX)NX$
$\Rightarrow (n+(n)NX)NX$
$\Rightarrow (n+(n)X)NX$
$\Rightarrow (n+(n))NX$
$\Rightarrow (n+(n))MFNX$
$\Rightarrow (n+(n))*FNX$
$\Rightarrow (n+(n))*nNX$
$\Rightarrow (n+(n))*nX$
$\Rightarrow (n+(n))*n$

| |
|---|
| n |
| N |
| X |
| ) |
| N |
| * |
| n |
| N |
| X |
| $ |

Finished

| | | | | | | | | | |
|---|---|---|---|---|---|---|---|---|---|
| ( | n | + | ( | n | ) | ) | * | n | $ |
| ↑ | ↑ | ↑ | ↑ | ↑ | ↑ | ↑ | ↑ | ↑ | |

$E \rightarrow T\ X$
$X \rightarrow A\ T\ X \mid \lambda$
$A \rightarrow + \mid -$
$T \rightarrow F\ N$
$N \rightarrow M\ F\ N \mid \lambda$
$M \rightarrow *$
$F \rightarrow (\ E\ ) \mid n$

# LL(1) Parsing Algorithm

Push the start symbol into the stack

WHILE stack is not empty ($ is not on top of stack) and the stream of tokens is not empty (the next input token is not $)

SWITCH (Top of stack, next token)

CASE (terminal a, a):

Pop stack; Get next token

CASE (nonterminal A, terminal a):

IF the parsing table entry M[A, a] is not empty THEN

Get $A \rightarrow X_1 X_2 \ldots X_n$ from the parsing table entry M[A, a] Pop stack;

Push $X_n \ldots X_2 X_1$ into stack in that order

ELSE Error

CASE ($,$): Accept

OTHER: Error

# LL(1) Parsing Table

If the nonterminal $N$ is on the top of stack and the next token is $t$, which production rule to use?

- Choose a rule $N \rightarrow X$ such that
  - $X \Rightarrow^* tY$ or
  - $X \Rightarrow^* \lambda$ and $S \Rightarrow^* WNtY$

| |
|---|
| t |
| Y |
| Q |

| |
|---|
| X |
| t |
| Y |

| | | | |
|---|---|---|---|
| t | … | … | … |

# First Set

- Let $X$ be $\lambda$ or be in $V$ or $T$.
- First($X$) is the set of the first terminal in any sentential form derived from $X$.
  - If $X$ is a terminal or $\lambda$, then First($X$) ={$X$}.
  - If $X$ is a nonterminal and $X \rightarrow X_1 X_2 \ldots X_n$ is a rule, then
    - First($X_1$) -{$\lambda$} is a subset of First(X)
    - First($X_i$)-{$\lambda$} is a subset of First(X) if for all $j<i$ First($X_j$) contains {$\lambda$}
    - $\lambda$ is in First(X) if for all $j \leq n$ First($X_j$)contains $\lambda$

# Examples of First Set

exp $\rightarrow$ exp addop term | term

addop $\rightarrow$ + | -

term $\rightarrow$ term mulop factor | factor

mulop $\rightarrow$ *

factor $\rightarrow$ (exp) | num

First(addop) = {+, -}

First(mulop) = {*}

First(factor) = {(, num}

First(term) = {(, num}

First(exp) = {(, num}

st $\rightarrow$ ifst | other

ifst $\rightarrow$ if ( exp ) st elsepart

elsepart $\rightarrow$ else st | $\lambda$

exp $\rightarrow$ 0 | 1

First(exp) = {0,1}

First(elsepart) = {else, $\lambda$}

First(ifst) = {if}

First(st) = {if, other}

# Algorithm for finding First(A)

For all terminals a, First(a) = {a}

For all nonterminals A, First(A) := { }

While there are changes to any First(A)

For each rule $A \rightarrow X_1 X_2 \ldots X_n$

For each $X_i$ in $\{X_1, X_2, \ldots, X_n\}$

If for all $j<i$ First($X_j$) contains $\lambda$,

Then

add First($X_i$)-{$\lambda$} to First(A)

If $\lambda$ is in First($X_1$), First($X_2$), ..., and First($X_n$)

Then add $\lambda$ to First(A)

If A is a terminal or $\lambda$, then First(A) = {A}.

If A is a nonterminal, then for each rule $A \rightarrow X_1 X_2 \ldots X_n$, First(A) contains First($X_1$) - {$\lambda$}.

If also for some $i<n$, First($X_1$), First($X_2$), ..., and First($X_i$) contain $\lambda$, then First(A) contains First($X_{i+1}$)-{$\lambda$}.

If First($X_1$), First($X_2$), ..., and First($X_n$) contain $\lambda$, then First(A) also contains $\lambda$.

# Finding First Set: An Example

exp → term exp′

exp′ → addop term exp′ | λ

addop → + | -

term → factor term′

term′ → mulop factor term′ | λ

mulop → *

factor → ( exp ) | num

| | First |
|---|---|
| exp | |
| exp′ | λ |
| addop | + - |
| term | ( num |
| term′ | λ |
| mulop | * |
| factor | ( num |

# Follow Set

- Let $ denote the end of input tokens
- If A is the start symbol, then $ is in Follow(A).
- If there is a rule $B \rightarrow X\ A\ Y$, then First(Y) - $\{\lambda\}$ is in Follow(A).
- If there is production $B \rightarrow X\ A\ Y$ and $\lambda$ is in First(Y), then Follow(A) contains Follow(B).

# Algorithm for Finding Follow(A)

**Follow(S) = {$}**

**FOR each A in V-{S}**

**Follow(A)={}**

**WHILE change is made to some Follow sets**

**FOR each production $A \rightarrow X_1 X_2 \ldots X_n$,**

**FOR each nonterminal $X_i$**

**Add First($X_{i+1} X_{i+2} \ldots X_n$)-{$\lambda$} into Follow($X_i$).**

**(NOTE: If i=n, $X_{i+1} X_{i+2} \ldots X_n = \lambda$)**

**IF $\lambda$ is in First($X_{i+1} X_{i+2} \ldots X_n$) THEN**

**Add Follow(A) to Follow($X_i$)**

If A is the start symbol, then $ is in Follow(A).

If there is a rule $A \rightarrow Y X Z$, then First(Z) - {$\lambda$} is in Follow(X).

If there is production $B \rightarrow X A Y$ and $\lambda$ is in First(Y), then Follow(A) contains Follow(B).

# Finding Follow Set: An Example

exp → term exp′

exp′ → addop term exp′ | λ

addop → + | -

term → factor term′

term′ → mulop factor term′ |λ

mulop → *

factor → ( exp ) | num

| | First | Follow |
|---|---|---|
| exp | ( num | $ ) |
| exp′ | λ + - | $ ) |
| addop | + - | |
| term | ( num | + - $ ) |
| term′ | λ * | |
| mulop | * | |
| factor | ( num | |

# Constructing LL(1) Parsing Tables

FOR each nonterminal A and a production $A \rightarrow X$

FOR each token a in First(X)

$A \rightarrow X$ is in M(A, a)

IF $\lambda$ is in First(X) THEN

FOR each element a in Follow(A)

Add $A \rightarrow X$ to M(A, a)

# Example: Constructing LL(1) Parsing Table

| | First | Follow |
|---|---|---|
| exp | {(, num} | {$,)} |
| exp' | {+,-, λ} | {$,)} |
| addop | {+,-} | {(,num} |
| term | {(,num} | {+,-,),$} |
| term' | {*, λ} | {+,-,),$} |
| mulop | {*} | {(,num} |
| factor | {(, num} | {*,+,-,),$} |

1 exp → term exp'
2 exp' → addop term exp'
3 exp' → λ
4 addop → +
5 addop → -
6 term → factor term'
7 term' → mulop factor term'
8 term' → λ
9 mulop → *
10 factor → ( exp )
11 factor → num

| | ( | ) | + | - | * | n | $ |
|---|---|---|---|---|---|---|---|
| exp | 1 | | | | | 1 | |
| exp' | | 3 | 2 | 2 | | | 3 |
| addop | | | 4 | 5 | | | |
| term | 6 | | | | | 6 | |
| term' | | 8 | 8 | 8 | 7 | | 8 |
| mulop | | | | | 9 | | |
| factor | 10 | | | | | 11 | |

# LL(1) Grammar

- A grammar is an LL(1) grammar if its LL(1) parsing table has at most one production in each table entry.

# LL(1) Parsing Table for non-LL(1) Grammar

1 exp → exp addop term
2 exp → term
3 term → term mulop factor
4 term → factor
5 factor → ( exp )
6 factor → num
7 addop → +
8 addop → -
9 mulop → *

| | ( | ) | + | - | * | num | $ |
|---|---|---|---|---|---|---|---|
| exp | 1,2 | | | | | 1,2 | |
| term | 3,4 | | | | | 3,4 | |
| factor | 5 | | | | | 6 | |
| addop | | | 7 | 8 | | | |
| mulop | | | | | 9 | | |

First(exp) = { (, num }
First(term) = { (, num }
First(factor) = { (, num }
First(addop) = { +, - }
First(mulop) = { * }

# Causes of Non-LL(1) Grammar

- What causes grammar being non-LL(1)?
  - Left-recursion
  - Left factor

# Left Recursion

- Immediate left recursion
  - $A \rightarrow A\ X \mid Y$ $\quad A=Y\ X^*$
  - $A \rightarrow A\ X_1 \mid A\ X_2 \mid \ldots \mid A\ X_n \mid Y_1 \mid Y_2 \mid \ldots \mid Y_m$

$A=\{Y_1, Y_2, \ldots, Y_m\}\ \{X_1, X_2, \ldots, X_n\}^*$

- Can be removed very easily
  - $A \rightarrow Y\ A',\ A' \rightarrow X\ A' \mid \lambda$
  - $A \rightarrow Y_1\ A' \mid Y_2\ A' \mid \ldots \mid Y_m\ A',$ $A' \rightarrow X_1\ A' \mid X_2\ A' \mid \ldots \mid X_n\ A' \mid \lambda$

- General left recursion
  - $A \Rightarrow X \Rightarrow^* A\ Y$

- Can be removed when there is no empty-string production and no cycle in the grammar

# Removal of Immediate Left Recursion

exp → exp + term | exp - term | term

term → term * factor | factor

factor → ( exp ) | num

- Remove left recursion

exp → term exp′ exp = term (± term)*

exp′ → + term exp′ | - term exp′ | λ

term → factor term′ term = factor (* factor)*

term′ → * factor term′ | λ

factor → ( exp ) | num

# General Left Recursion

- Bad News!
  - Can only be removed when there is no empty-string production and no cycle in the grammar.
- Good News!!!!
  - Never seen in grammars of any programming languages

# Left Factoring

- Left factor causes non-LL(1)
  - Given $A \rightarrow X\ Y \mid X\ Z$. Both $A \rightarrow X\ Y$ and $A \rightarrow X\ Z$ can be chosen when A is on top of stack and a token in First(X) is the next token.

$A \rightarrow X\ Y \mid X\ Z$

can be left-factored as

$A \rightarrow X\ A'$ and $A' \rightarrow Y \mid Z$

# Example of Left Factor

ifSt → **if (** exp **)** st **else** st | **if (** exp **)** st

can be left-factored as

ifSt → **if (** exp **)** st elsePart

elsePart → **else** st | λ

seq → st **;** seq | st

can be left-factored as

seq → st seq′

seq′ → **;** seq | λ

# Outline

- Top-down parsing
  - Recursive-descent parsing
  - LL(1) parsing
    - LL(1) parsing algorithm
    - First and follow sets
    - Constructing LL(1) parsing table
    - Error recovery
- Bottom-up parsing
  - Shift-reduce parsers
  - LR(0) parsing
    - LR(0) items
    - Finite automata of items
    - LR(0) parsing algorithm
    - LR(0) grammar
  - SLR(1) parsing
    - SLR(1) parsing algorithm
    - SLR(1) grammar
    - Parsing conflict

# Bottom-up Parsing

- Use explicit stack to perform a parse
- Simulate rightmost derivation (R) from left (L) to right, thus called LR parsing
- More powerful than top-down parsing
  - Left recursion does not cause problem
- Two actions
  - Shift: take next input token into the stack
  - Reduce: replace a string B on top of stack by a nonterminal A, given a production $A \rightarrow B$

# Example of Shift-reduce Parsing

- Grammar

  $S' \rightarrow S$

  $S \rightarrow (S)S \mid \lambda$

- Parsing actions

| Stack | Input | Action |
|---|---|---|
| $ | ( ( ) ) $ | |
| $ ( | ( ) ) $ | |
| $ ( ( | ) ) $ | |
| $ ( ( S | ) ) $ | |
| $ ( ( S ) | ) $ | |
| $ ( ( S ) S | ) $ | |
| $ ( S | ) $ | |
| $ ( S ) | $ | |
| $ ( S ) S | $ | |
| $ S | $ | |

- Reverse of
- rightmost derivation
- from left to right

| | |
|---|---|
| 1 | $\Rightarrow$ ( ( ) ) |
| 2 | $\Rightarrow$ ( ( ) ) |
| 3 | $\Rightarrow$ ( ( ) ) |
| 4 | $\Rightarrow$ ( ( S ) ) |
| 5 | $\Rightarrow$ ( ( S ) ) |
| 6 | $\Rightarrow$ ( ( S ) S ) |
| 7 | $\Rightarrow$ ( S ) |
| 8 | $\Rightarrow$ ( S ) |
| 9 | $\Rightarrow$ ( S ) S |
| 10 S′ | $\Rightarrow$ S |

# Example of Shift-reduce Parsing

- Grammar

  $S' \rightarrow S$

  $S \rightarrow (S)S \mid \lambda$

- Parsing actions

| Stack | Input | Action |
|---|---|---|
| $ | ( ( ) ) $ | shift |
| $ ( | ( ) ) $ | shift |
| $ ( ( | ) ) $ | reduce $S \rightarrow \lambda$ |
| $ ( ( S | ) ) $ | shift |
| $ ( ( S ) | ) $ | reduce $S \rightarrow \lambda$ |
| $ ( ( S ) S | ) $ | reduce $S \rightarrow ( S ) S$ |
| $ ( S | ) $ | shift |
| $ ( S ) | $ | reduce $S \rightarrow \lambda$ |
| $ ( S ) S | $ | reduce $S \rightarrow ( S ) S$ |
| $ S | $ | accept |

Viable prefix

| | |
|---|---|
| 1 | $\Rightarrow$ ( ( ) ) |
| 2 | $\Rightarrow$ ( ( ) ) |
| 3 | $\Rightarrow$ ( ( ) ) |
| 4 | $\Rightarrow$ ( ( S ) ) |
| 5 | $\Rightarrow$ ( ( S ) ) |
| 6 | $\Rightarrow$ ( ( S ) S ) |
| 7 | $\Rightarrow$ ( S ) |
| 8 | $\Rightarrow$ ( S ) |
| 9 | $\Rightarrow$ ( S ) S |
| 10 S′ | $\Rightarrow$ S |

handle

# Terminologies

- Right sentential form
  - sentential form in a rightmost derivation
- Viable prefix
  - sequence of symbols on the parsing stack
- Handle
  - right sentential form + position where reduction can be performed + production used for reduction
- LR(0) item
  - production with distinguished position in its RHS

- Right sentential form
  - ( S ) S
  - ( ( S ) S )
- Viable prefix
  - ( S ) S, ( S ), ( S, (
  - ( ( S ) S, ( ( S ), ( ( S , ( (, (
- Handle
  - ( S ) S. with $S \rightarrow \lambda$
  - ( S ) S . with $S \rightarrow \lambda$
  - ( ( S ) S . ) with $S \rightarrow$ ( S ) S
- LR(0) item
  - $S \rightarrow$ ( S ) S.
  - $S \rightarrow$ ( S ) . S
  - $S \rightarrow$ ( S . ) S
  - $S \rightarrow$ ( . S ) S
  - $S \rightarrow$ . ( S ) S

# Shift-reduce parsers

- There are two possible actions:
  - shift and reduce
- Parsing is completed when
  - the input stream is empty and
  - the stack contains only the start symbol
- The grammar must be *augmented*
  - a new start symbol S′ is added
  - a production S′ → S is added
    - To make sure that parsing is finished when S′ is on top of stack because S′ never appears on the RHS of any production.

# LR(0) parsing

- Keep track of what is left to be done in the parsing process by using finite automata of items
  - An item $A \rightarrow w \,.\, B\ y$ means:
    - $A \rightarrow w\ B\ y$ might be used for the reduction in the future,
    - at the time, we know we already construct w in the parsing process,
    - if B is constructed next, we get the new item $A \rightarrow w\ B\ .\ Y$

# LR(0) items

- LR(0) item
  - production with a distinguished position in the RHS
- Initial Item
  - Item with the distinguished position on the leftmost of the production
- Complete Item
  - Item with the distinguished position on the rightmost of the production
- Closure Item of x
  - Item x together with items which can be reached from x via $\lambda$-transition
- Kernel Item
  - Original item, not including closure items

# Finite automata of items

Grammar:

$S' \to S$

$S \to (S)S$

$S \to \lambda$

Items:

$S' \to .S$

$S' \to S.$

$S \to .(S)S$

$S \to (.S)S$

$S \to (S.)S$

$S \to (S).S$

$S \to (S)S.$

$S \to .$

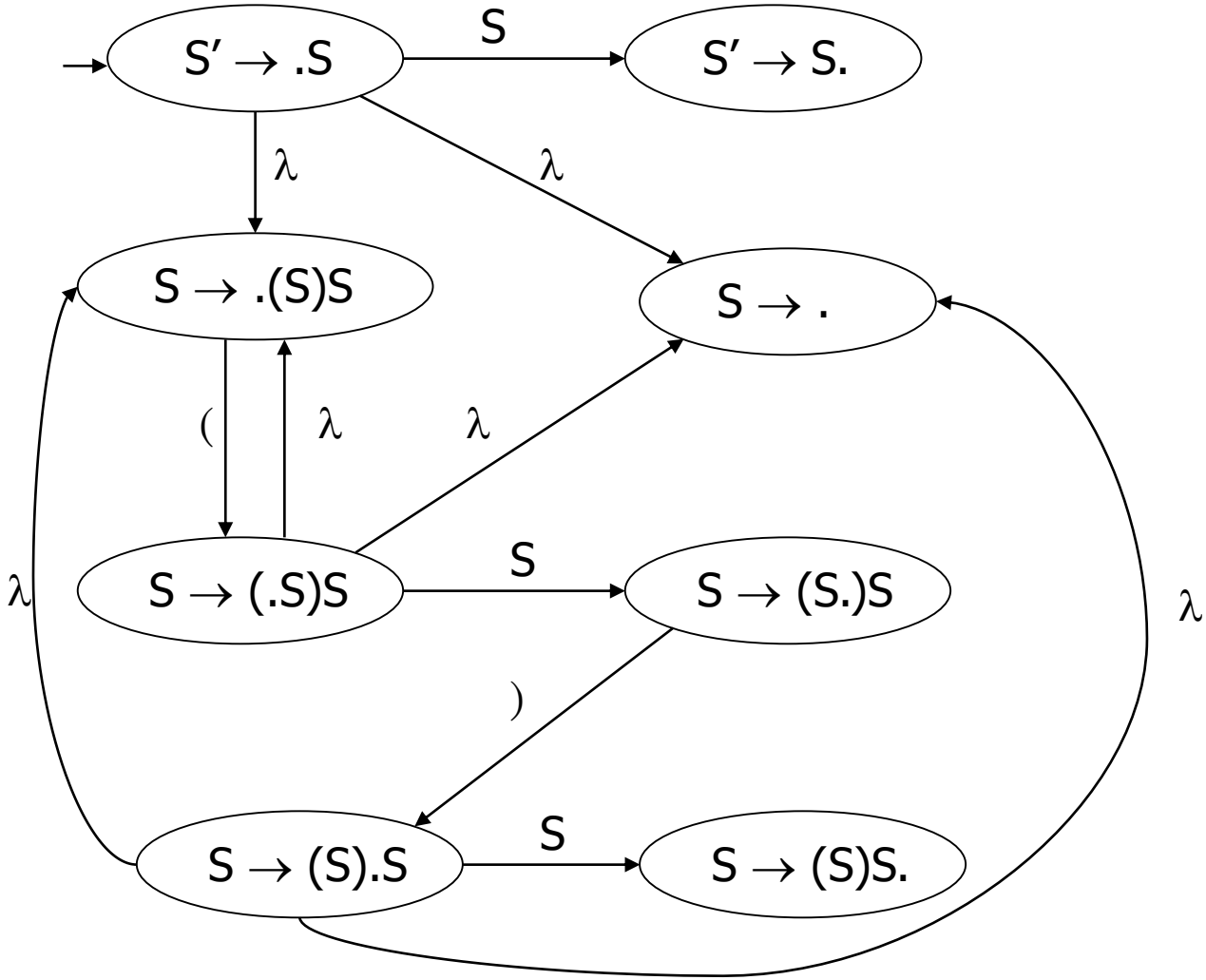

# DFA of LR(0) Items

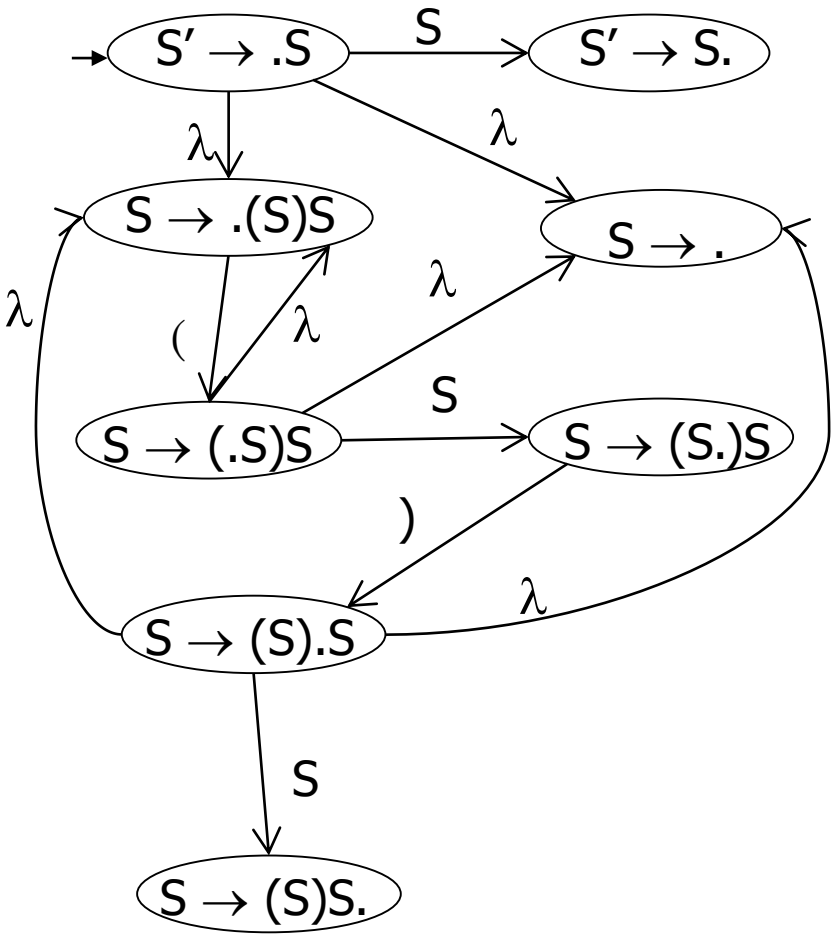


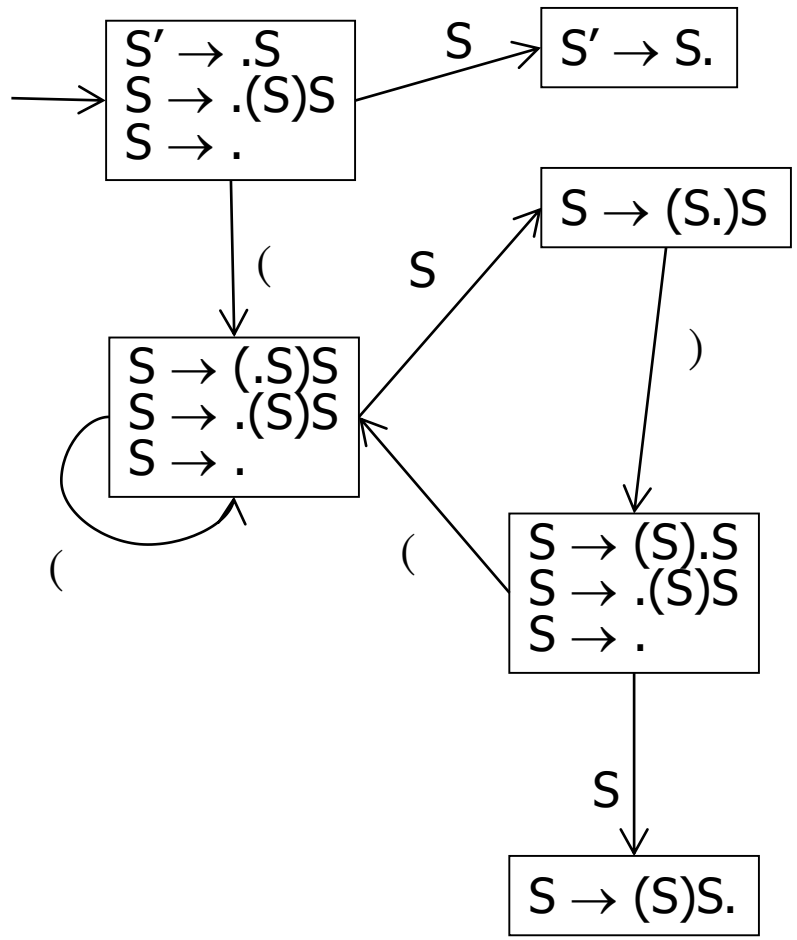

# LR(0) parsing algorithm

| Item in state | token | Action |
|---|---|---|
| A-> x.By where B is terminal | B | shift B and push state s containing A -> xB.y |
| A-> x.By where B is terminal | not B | error |
| A -> x. | - | reduce with A -> x (i.e. pop x, backup to the state s on top of stack) and push A with new state d(s,A) |
| S’ -> S. | none | accept |
| S’ -> S. | any | error |

# LR(0) Parsing Table

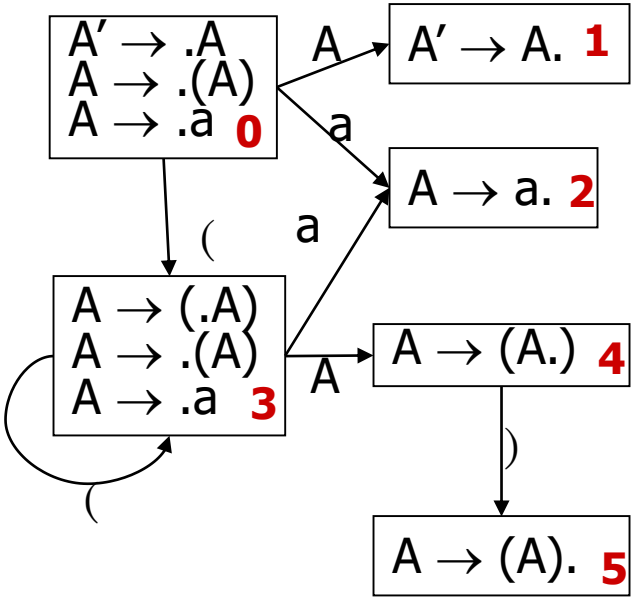


| State | Action | Rule | ( | a | ) | A |
|---|---|---|---|---|---|---|
| 0 | shift | | 3 | 2 | | 1 |
| 1 | reduce | A′ -> A | | | | |
| 2 | reduce | A -> a | | | | |
| 3 | shift | | 3 | 2 | | 4 |
| 4 | shift | | | | 5 | |
| 5 | reduce | A -> (A) | | | | |

# Example of LR(0) Parsing

| State | Action | Rule | ( | a | ) | A |
|---|---|---|---|---|---|---|
| 0 | shift | | 3 | 2 | | 1 |
| 1 | reduce | A’ -> A | | | | |
| 2 | reduce | A -> a | | | | |
| 3 | shift | | 3 | 2 | | 4 |
| 4 | shift | | | | 5 | |
| 5 | reduce | A -> (A) | | | | |

| Stack | Input | Action |
|---|---|---|
| $0 | ( ( a ) ) $ | shift |
| $0(3 | ( a ) ) $ | shift |
| $0(3(3 | a ) ) $ | shift |
| $0(3(3a2 | ) ) $ | reduce |
| $0(3(3A4 | ) ) $ | shift |
| $0(3(3A4)5 | ) $ | reduce |
| $0(3A4 | ) $ | shift |
| $0(3A4)5 | $ | reduce |
| $0A1 | $ | accept |

# Non-LR(0)Grammar

- Conflict
  - Shift-reduce conflict
    - A state contains a complete item A → x. and a shift item A → x.By
  - Reduce-reduce conflict
    - A state contains more than one complete items.
- A grammar is a LR(0) grammar if there is no conflict in the grammar.

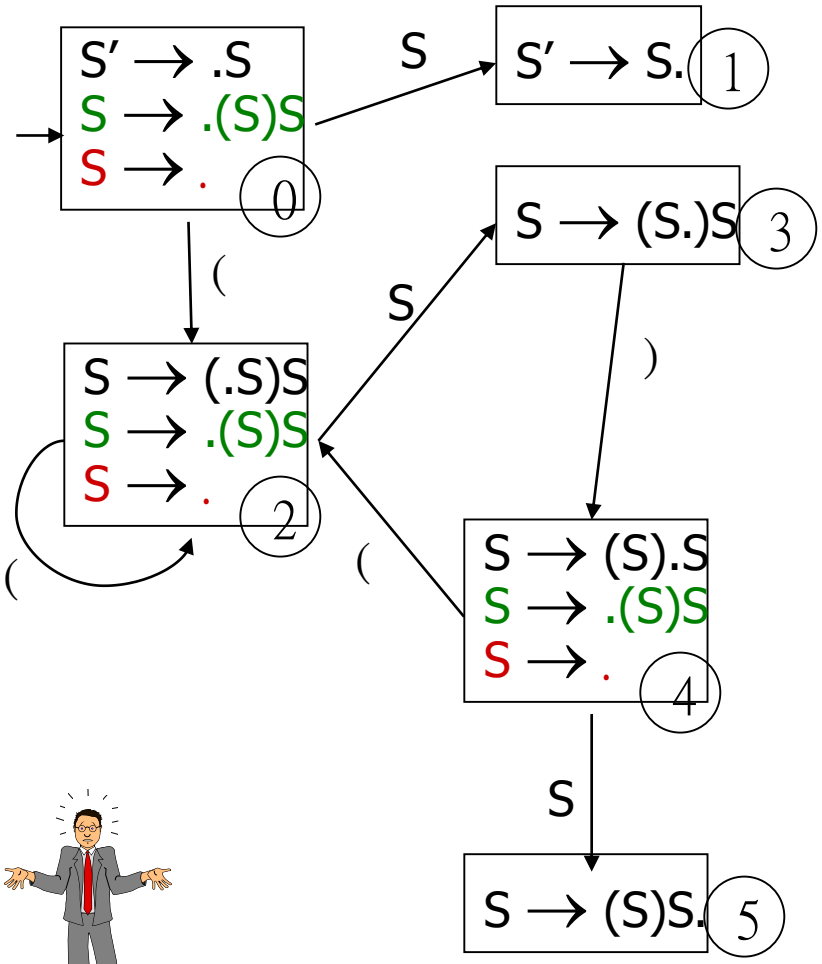

# SLR(1) parsing

- Simple LR with 1 lookahead symbol
- Examine the next token before deciding to shift or reduce
  - If the next token is the token expected in an item, then it can be shifted into the stack.
  - If a complete item $A \rightarrow x.$ is constructed and the next token is in Follow(A), then reduction can be done using $A \rightarrow x$.
  - Otherwise, error occurs.
- Can avoid conflict

# SLR(1) parsing algorithm

| Item in state | token | Action |
|---|---|---|
| A-> x.By (B is terminal) | B | shift B and push state s containing A -> xB.y |
| A-> x.By (B is terminal) | not B | error |
| A -> x. | in Follow(A) | reduce with A -> x (i.e. pop x, backup to the state s on top of stack) and push A with new state d(s,A) |
| A -> x. | not in Follow(A) | error |
| S' -> S. | none | accept |
| S' -> S. | any | error |

# SLR(1) grammar

- Conflict
  - Shift-reduce conflict
    - A state contains a shift item $A \rightarrow x.Wy$ such that W is a terminal and a complete item $B \rightarrow z.$ such that W is in Follow(B).
  - Reduce-reduce conflict
    - A state contains more than one complete item with some common Follow set.
- A grammar is an SLR(1) grammar if there is no conflict in the grammar.

# SLR(1) Parsing Table

$A \rightarrow (A) \mid a$

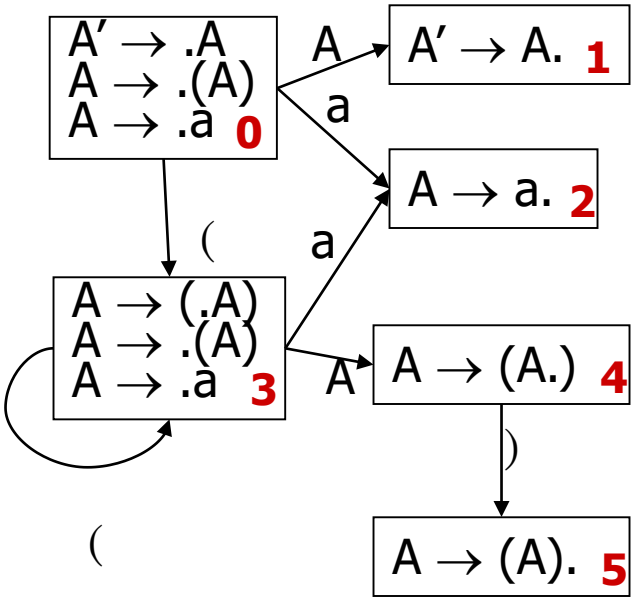


| State | ( | a | ) | $ | A |
|---|---|---|---|---|---|
| 0 | S3 | S2 | | | 1 |
| 1 | | | | AC | |
| 2 | | | R2 | | |
| 3 | S3 | S2 | | | 4 |
| 4 | | | S5 | | |
| 5 | | | R1 | | |

# SLR(1) Grammar not LR(0)

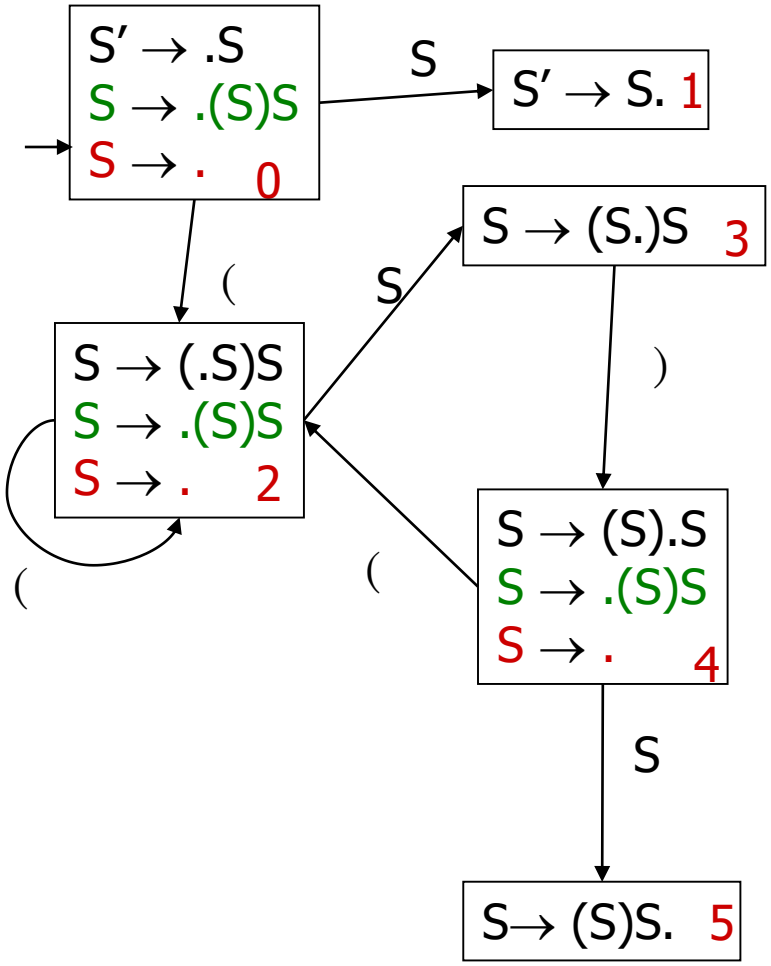


$S \rightarrow (S)S \mid \lambda$

| State | ( | ) | $ | S |
|---|---|---|---|---|
| 0 | S2 | R2 | R2 | 1 |
| 1 | | | AC | |
| 2 | S2 | R2 | R2 | 3 |
| 3 | | S4 | | |
| 4 | S2 | R2 | R2 | 5 |
| 5 | | R1 | R1 | |

# Disambiguating Rules for Parsing Conflict

- Shift-reduce conflict
  - Prefer shift over reduce
    - In case of nested if statements, preferring shift over reduce implies most closely nested rule for dangling else
- Reduce-reduce conflict
  - Error in design

# Dangling Else

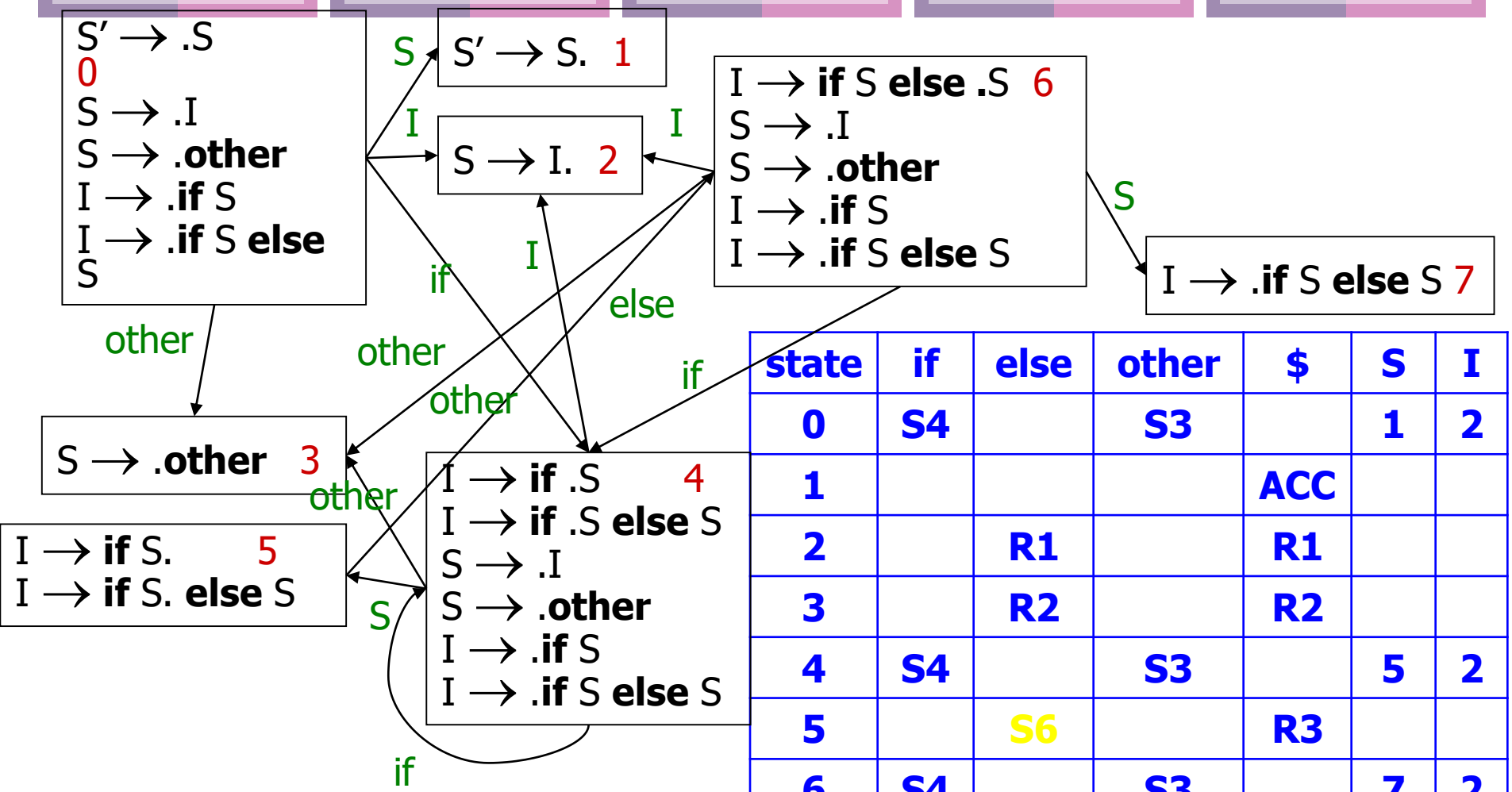


| state | if | else | other | $ | S | I |
|---|---|---|---|---|---|---|
| 0 | S4 | | S3 | | 1 | 2 |
| 1 | | | | ACC | | |
| 2 | | R1 | | R1 | | |
| 3 | | R2 | | R2 | | |
| 4 | S4 | | S3 | | 5 | 2 |
| 5 | | S6 | | R3 | | |
| 6 | S4 | | S3 | | 7 | 2 |
| 7 | | R4 | | R4 | | |

# End